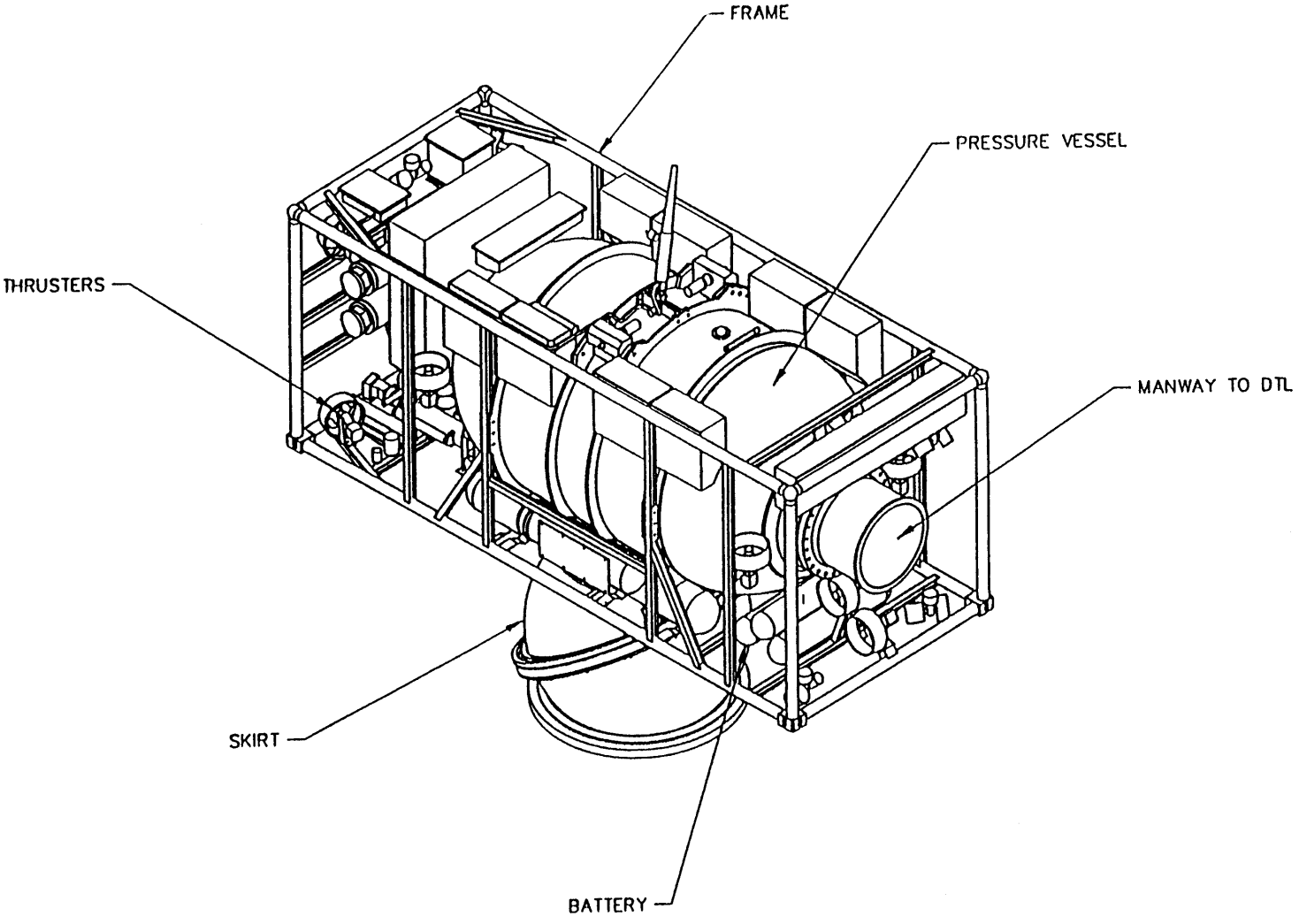
FRAME
PRESSURE VESSEL
THRUSTERS
MANWAY TO DTL
SKIRT
BATTERY