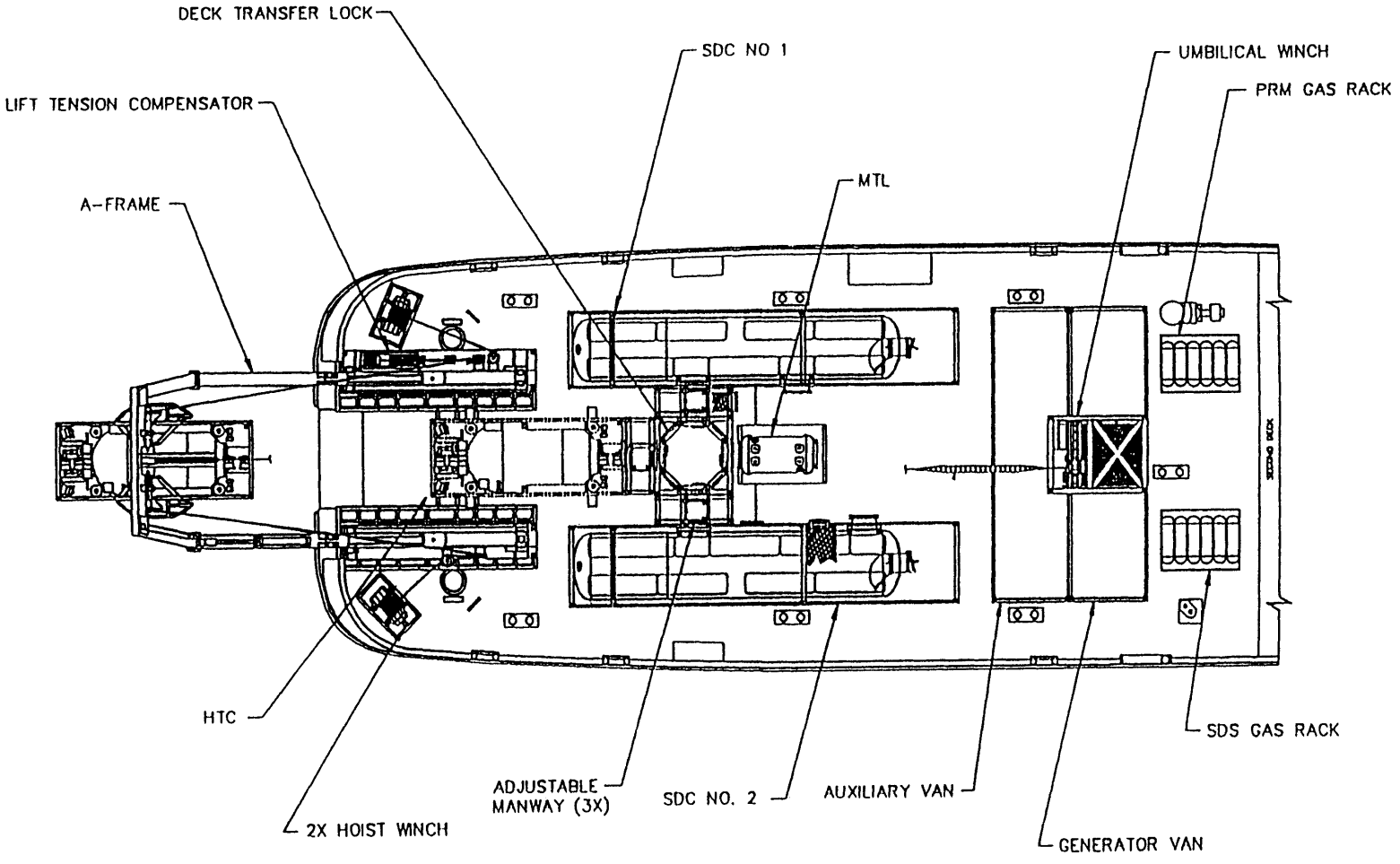
DECK TRANSFER LOCK
SDC NO 1
UMBILICAL WINCH
PRM GAS RACK
LIFT TENSION COMPENSATOR
MTL
A-FRAME
HTC
2X HOIST WINCH
ADJUSTABLE
MANWAY (3X)
SDC NO. 2
AUXILIARY VAN
GENERATOR VAN
SDS GAS RACK